Mechsense® Digital

Mechworks Systems Inc.

An Integrated Accelerometer System

MDS202, MDS302, MDS210, MDS310

Features

- **High performance, 2-axis and 3-axis, ±2g and ±10g general purpose accelerometers**
- **Built-in Signal Conditioner – user configurable bandwidth and gain**
- **Built-in Analog to Digital Converter – 12-bit accuracy with sampling up to 2000 Hz per channel**
- **Port powered USB, half-duplex RS-485 and RS-232 with reduced capacity**
- **Factory calibrated, includes self-diagnostic features**
- **Small 2-7/8 x 1-1/2 x 1 inch package with mounting flanges**
- **Low-cost system solution**

Applications

- **Automotive testing**
- **Vibration monitoring**
- **Alarms and motion detectors**

General Description

Mechsense Digital is a completely digital, low-cost sensing system. It integrates a 2 or 3-axis accelerometer with a reconfigurable signal conditioning unit, a 12-bit analog to digital converter and power regulator, all in one small, low-cost package. It also includes the Mechmanager™ software package that enables the user to conveniently collect, display and store data as well easily re-configure the sensor's operation as required. Mechsense Digital is available in ranges of ±2g and ±10g with a typical noise floor of 200µg/√Hz. Standard applications include automotive testing, vibration monitoring, alarms and motion detection. Mechsense Digital is available in a compact, mountable and hermetically sealed 2-7/8 x 1-1/2 x 1 inch package.

Mechsense Digital is available with 3 communication interfaces. The port powered USB interface is a 1.1/2.0 full-speed interface that allows the sensors to be meshed together for a multi-drop network of up to 64 units. A half-duplex RS-485 interface is available for greater communication lengths, even in noisy environments. With the RS-485 interface option, units can be daisy chained together to create an addressable multi-sensor network of up to 64 units. An RS-232 interface is also available but at reduced capacity.

The accelerometer's signal conditioner features a 5th order Butterworth lowpass filter that is configurable from DC - 50Hz to DC - 1000Hz and a gain adjustment from 1.00 to 10.00. Data sampling ranges from 1 Hz to 2000 Hz per channel. With the RS-232 interface option, the maximum lowpass filter adjustment is reduced to DC – 500Hz and the maximum sampling rate is 1000Hz per channel. A re-calibrate function accurately determines the zero g offset and sensitivity of each accelerometer axis. A temperature measurement can be employed by the user for a temperature compensation algorithm. A self-test function can be used for testing the unit's functionality.

With the Mechmanager interface software, the accelerometer unit interfaces with any PC running Windows 98 or better, for capturing, plotting and storing data. In addition, it allows the user to adjust all of the aforementioned features as well as provide FFT analysis.

Copyright © 2000 - 2006 Mechworks Systems Inc. All Rights Reserved. Mechsense is a registered trademark of Mechworks Systems Inc. in Canada and in the U.S.A. and may be pending or registered in other countries. Document Number: D-D041027-8

Ph: (519) 489-2080 Fax: (519) 746-1817 E-mail: info@mechworkssys.com Web: www.mechworkssys.com

Characteristics

Specifications	MDS202 MDS302	MDS210 MDS310	Comments
Sensor Performance			
Measurement Range (g)	± 2	± 10	Minimum
Zero g Voltage (V)	1.65	1.65	± 0.33
Output Range (V)	0 – 3.3	0 – 3.3	± 0.2
Minimum Sensitivity (mV/g)	189 ± 42	66 ± 17	User configurable
Nonlinearity (% of FS)	0.2	0.2	Typical
Alignment Error (Degrees)	± 1	± 1	Typical
Cross–Axis Sensitivity (%)	± 2	± 2	Typical
Noise (µg/√Hz rms)	200	200	Typical
Bandwidth (Hz) – USB or RS-485	DC-50 to DC–1000	DC-50 to DC-1000	User configurable
Bandwidth (Hz) – RS-232	DC-50 to DC–500	DC-50 to DC-500	User configurable
Self-test Duty Cycle Change	10%	3%	
System Performance			
ADC Resolution	12-bit	12-bit	
ADC Integral Linearity Error	± 2	± 2	
ADC Differential Linearity Error	± 1	± 1	
ADC Sampling Rate – USB or RS-485	1Hz-2000Hz/channel	1Hz-2000Hz/channel	User configurable
ADC Sampling Rate – RS-232	1Hz-1000Hz/channel	1Hz-1000Hz/channel	User configurable
Gain	1.00 – 10.00	1.00 – 10.00	User configurable
Environment			
Operating Temp. Range (°C)	-40 to +85	-40 to +85	
Shock (g)	1000	1000	
Electrical			
Supply Voltage (V)	5 - 12	5 - 12	
Supply Current (mA)	30	30	Maximum
Physical			
Size	2-7/8" x 1-1/2" x 1"	(7.3cm x 3.8cm x 2.5cm)	
Weight	1.4 oz	(40 gm)	Not including cable
Mounting	Screw down	Screw down	
Hermetic Seal	Yes	Yes	

Built-in Signal Conditioner

Bandwith

For purposes of anti-aliasing and noise reduction, the accelerometer's built-in signal conditioner can be configured to limit its frequency response. A 5th order Butterworth lowpass filter can be configured to provide filtering in the range of DC - 50 Hz to DC - 1000 Hz in integer increments. For the RS-232 interface option, filtering is available in the range of DC - 50 Hz to DC - 500 Hz in integer increments.

Copyright © 2000 - 2006 Mechworks Systems Inc. All Rights Reserved. Mechsense is a registered trademark of Mechworks Systems Inc. in Canada and in the U.S.A. and may be pending or registered in other countries. Document Number: D-D041027-8

Ph: (519) 489-2080 Fax: (519) 746-1817 E-mail: info@mechworkssys.com Web: www.mechworkssys.com

Gain
Mechsense Digital provides the user with the ability to monitor smaller acceleration ranges. The accelerometer's full-scale range can be amplified by a factor of 1.00 to 10.00 in increments of 0.01.

Mechmanager™ Software

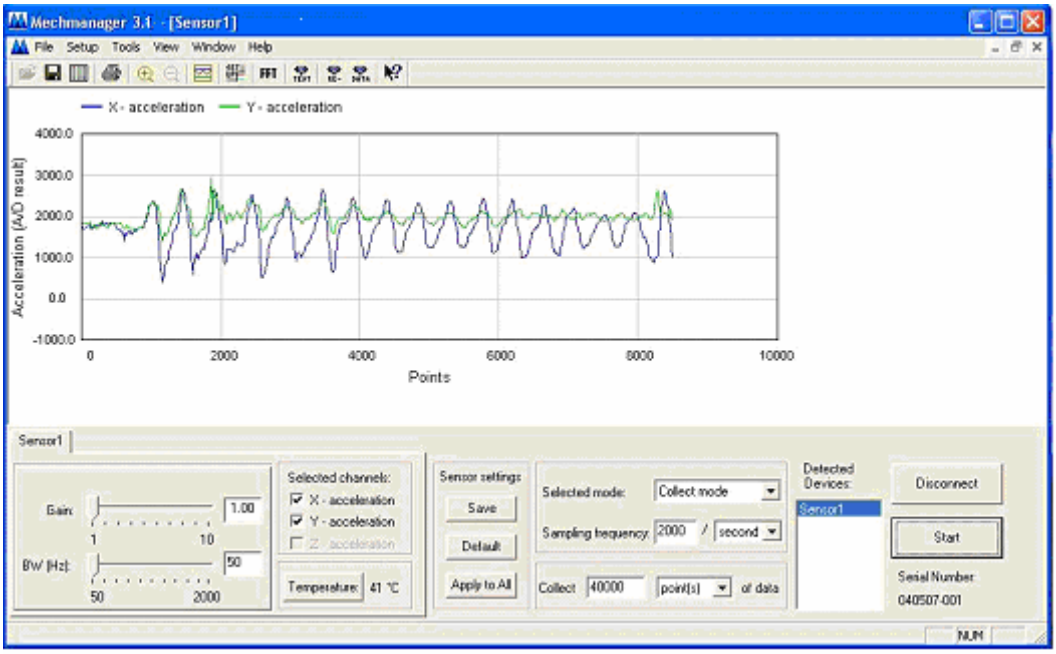

The accompanying Mechmanager software replaces the need for a data acquisition system and provides the user with a convenient means of obtaining, plotting and storing data. It also allows the user to tune the parameters of the accelerometer's built-in signal conditioner, re-calibrate the accelerometer, analysis data with an FFT function and much more.

The acceleration data and an extra temperature output are digitized as 12-bit values. This data can be plotted and conveniently stored as an ASCII comma delimited text file for importing into Excel or a space delimited data file for Matlab. In addition, an FFT function that plots the magnitude of captured data has been provided to aid with analysis.

Via the Mechmanager software, the bandwidth of the built-in signal conditioner can be configured from DC - 50 Hz to DC - 1000 Hz with the USB or RS-485 interface option and from DC - 50 Hz to DC – 500 Hz with the RS-232 interface option. The gain of the signal conditioner can be adjusted from 1.00 to 10.00. The sampling rate can be set to sample at 1Hz up to 2000 Hz per channel for sensors with a USB or RS-485 interface and up to 1000 Hz per channel for sensors with the RS-232 interface.

Sensor diagnostic features, such as a self-test mode that allows the user to test the accelerometer's functionality, are included. A re-calibrate function provides the user with the ability to obtain accurate zero g voltage and sensitivity measurements of the sensor. All features configured with the Mechmanager software can be saved by the accelerometer to define its future operation.

Copyright © 2000 - 2006 Mechworks Systems Inc. All Rights Reserved. Mechsense is a registered trademark of Mechworks Systems Inc. in Canada and in the U.S.A. and may be pending or registered in other countries. Document Number: D-D041027-8

Ph: (519) 489-2080 Fax: (519) 746-1817 E-mail: info@mechworkssys.com Web: www.mechworkssys.com

Package Information

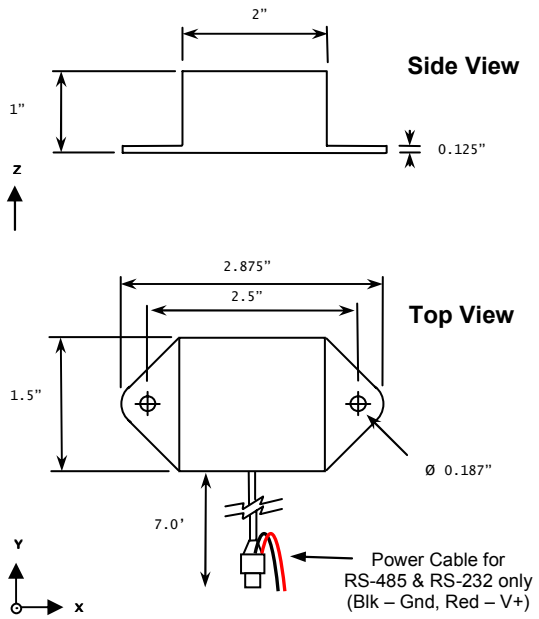

Connector Information

Interface Type	Connector Type
USB Interface	USB type A male adapter
RS-485 Interface (half duplex)	Male DB-9 adapter Pin 2 – + Differential Outp Pin 7 - - Differential Outpu
RS-232 Interface	Female DB-9 adapter Pin 2 – PC Rx Pin 3 – PC TX Pin 5 - Gnd

Ordering Information

Model	Axes	Range (g)	Communication Interface	Networking Ability	Includes
MDS202-U	X, Y	± 2	USB 1.1/2.0	Yes	Mechmanager 3.1
MDS210-U	X, Y	± 10	USB 1.1/2.0	Yes	Mechmanager 3.1
MDS302-U	X, Y, Z	± 2	USB 1.1/2.0	Yes	Mechmanager 3.1
MDS310-U	X, Y, Z	± 10	USB 1.1/2.0	Yes	Mechmanager 3.1
MDS202-R4	X, Y	± 2	RS-485 (half duplex)	Yes	Mechmanager 3.1
MDS210-R4	X, Y	± 10	RS-485 (half duplex)	Yes	Mechmanager 3.1
MDS302-R4	X, Y, Z	± 2	RS-485 (half duplex)	Yes	Mechmanager 3.1
MDS310-R4	X, Y, Z	± 10	RS-485 (half duplex)	Yes	Mechmanager 3.1
MDS202-R2	X, Y	± 2	RS-232	No	Mechmanager 3.1
MDS210-R2	X, Y	± 10	RS-232	No	Mechmanager 3.1
MDS302-R2	X, Y, Z	± 2	RS-232	No	Mechmanager 3.1
MDS310-R2	X, Y, Z	± 10	RS-232	No	Mechmanager 3.1

Copyright © 2000 - 2006 Mechworks Systems Inc. All Rights Reserved. Mechsense is a registered trademark of Mechworks Systems Inc. in Canada and in the U.S.A. and may be pending or registered in other countries. Document Number: D-D041027-8

Ph: (519) 489-2080 Fax: (519) 746-1817 E-mail: info@mechworkssys.com Web: www.mechworkssys.com